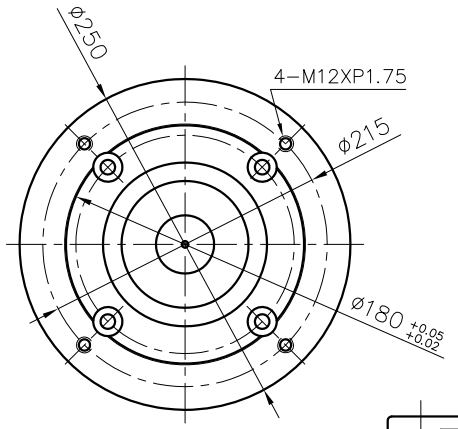

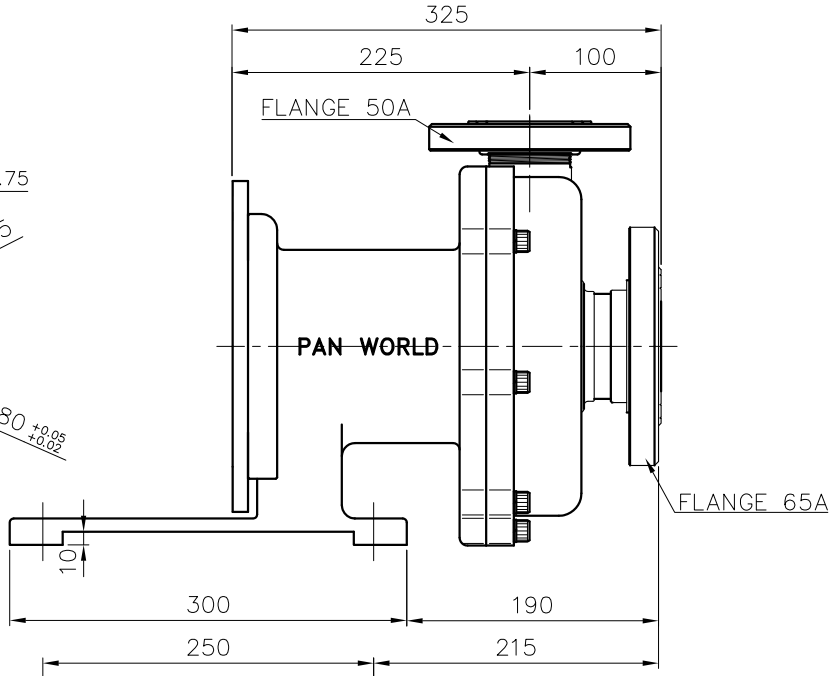

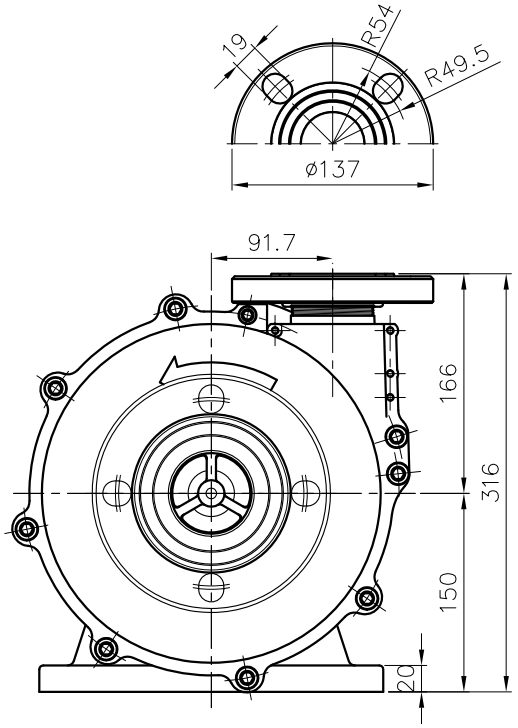

(L=60)

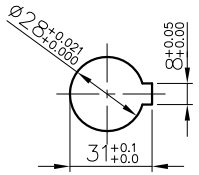

SCALE = 1:2

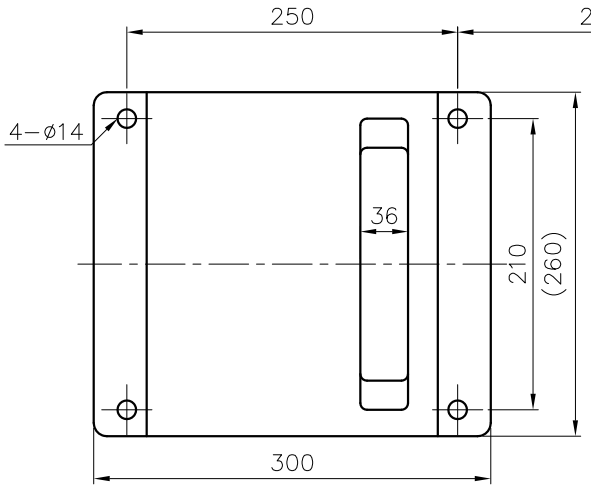

DIMENSION TOLERANCE : JIS 16 CLASS

		APPROVED		MDL, NAME	NH−555PWH/PWH−F	
UNIT	MM	CHECK	07 08 15	DWG, NAME	INSTALLATION DRAWING	
SCALE	1:4	DESIGN	07 08 15			
EDITION	1	DR.BY	07 08 15 FANNY	DWG, NO.	T1753213	A3
TPW HONG YUAN		PAN WORLD CO.,LTD. パンワールド 株式会社				