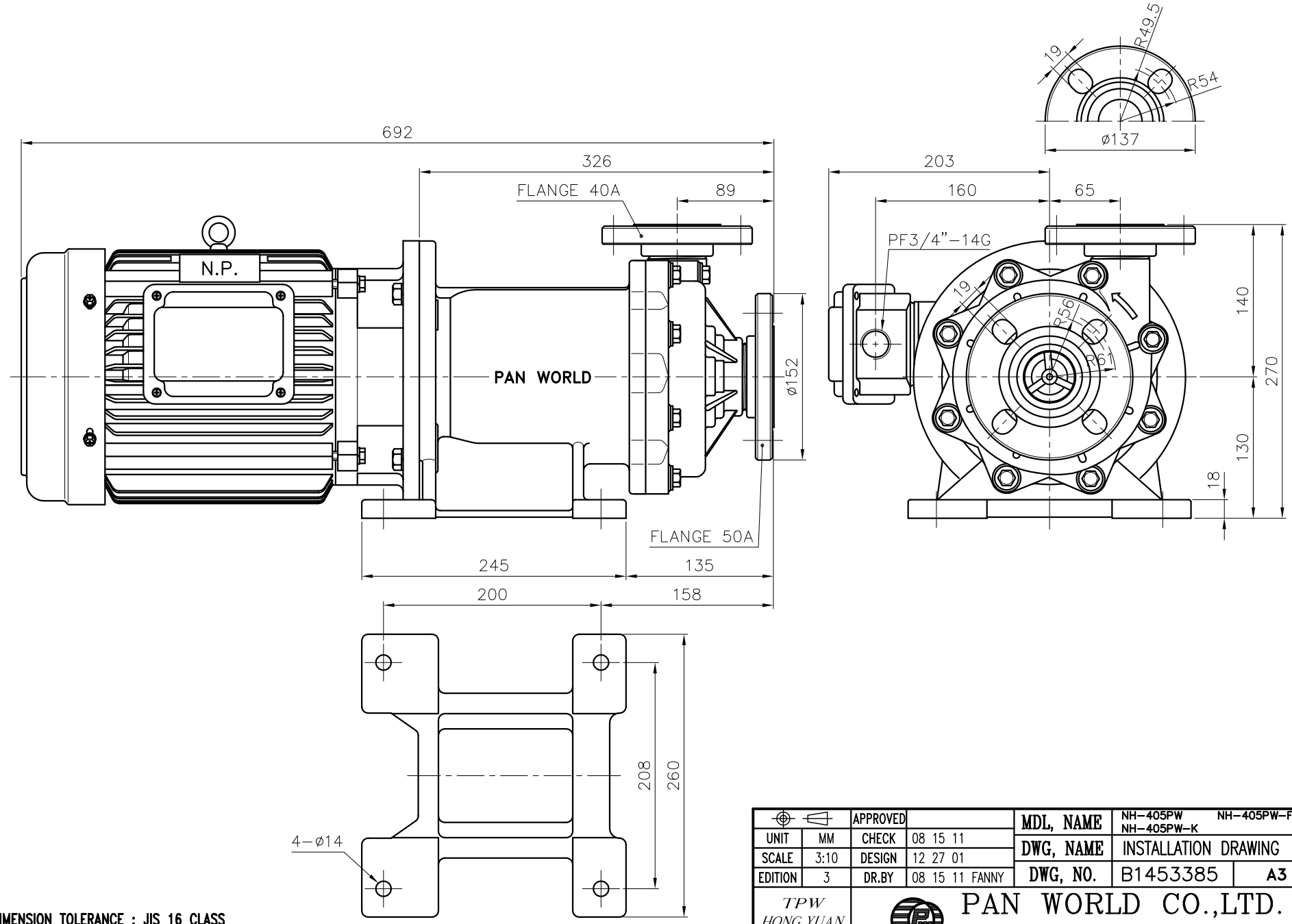


DIMENSION TOLERANCE : JIS 16 CLASS

| | | | | | |
|---|---|---|---|---|---|
| | | APPROVED | | MDL, NAME | NH−405PW NH−405PW−F NH−405PW−K |
| UNIT | MM | CHECK | 08 15 11 | DWG, NAME | INSTALLATION DRAWING |
| SCALE | 3:10 | DESIGN | 12 27 01 | | |
| EDITION | 3 | DR.BY | 08 15 11 FANNY | DWG, NO. | B1453385 A3 |

TPW
HONG YUAN

PAN WORLD CO.,LTD.
パンワールド 株式会社