NO	PART NAME	Q'TY	MATERIAL	NOTE	DWG, NO.
02-2	SPINDLE	1	CERAMIC SIC	ø4X29.7	P2331107
02-1	FRONT THRUST PAD	1	RULON	ø9Xø4.2X1.2	A2221580
02	FRONT CASING ASS'Y	1	PVDF	ø54X35	P2201370
01	MOTOR	100~120V,200~240V , 5W,1ø,2P			

NO	PART NAME	Q'TY	MATERIAL	NOTE	DWG, NO.
04-3	IMPELLER COVER	1	PPG	ø43X1.5	P2441115
04-2	INNER MAGNET	1	FERRITE	ø18X12	P2441115
04-1	IMPELLER VANE	1	PPG	ø43X21	P2441115
04	IMPELLER ASS'Y	1	PPG	ø43X22.5	P2401035
03	REAR CASING	1	PVDF	ø54X28.5	P2301369

NO	PART NAME	Q'TY	MATERIAL	NOTE	DWG, NO.
07	SCREW,CROSS RECESS HEAD w/t P.W.(ø6Xø3.2Xt0.5)	4	SUS304	M3X22	P9111721
06	O. RING	1	FKM	ø44.5Xø2	S45
05-2	OUTER MAGNET	1	FERRITE	ø38Xø25X10	P2521094
05-1	MAGNET HOUSING	1		ø41X59.5	P1201373
05	OUTER DRIVE RING	1		ø41X62.5	P2501413

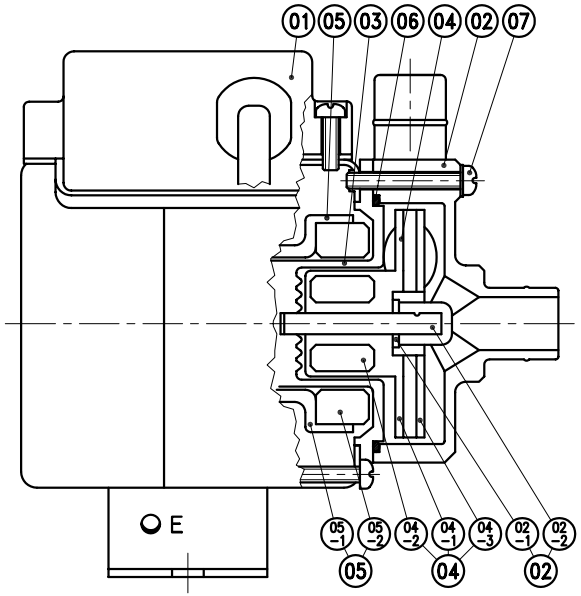

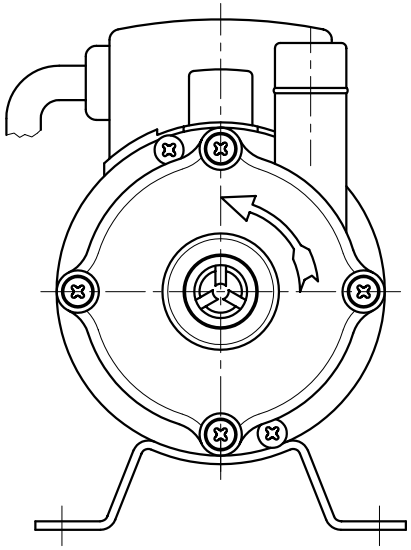

G : 1/2"X 1/2"
NPT : 1/2"X 1/2"

		APPROVED		MDL, NAME	NH-1PX-Z-N
UNIT	MM	CHECK	12 31 03	DWG, NAME	CONSTRUCTION DRAWING
SCALE	1:1	DESIGN	07 24 98	DWG, NO.	B2001186 A3
EDITION	3	DR.BY	12 31 03 BECKY		

TPW
HONG YUAN

PAN WORLD CO.,LTD.
パンワールド 株式会社